TYPE 1

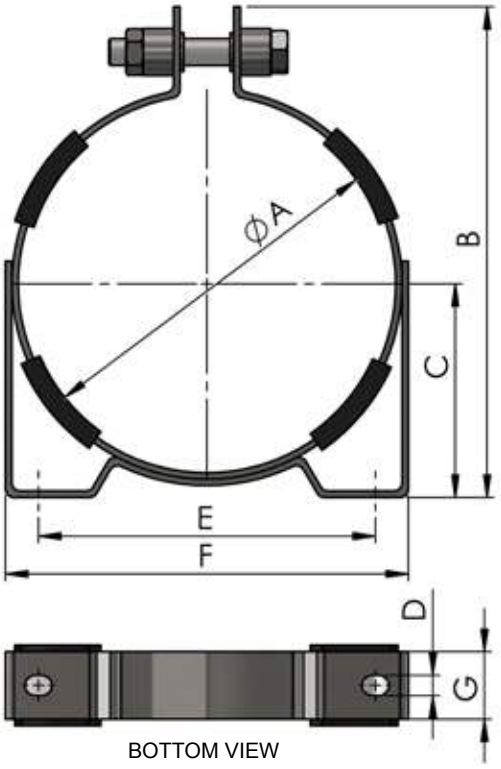

BOTTOM VIEW

TYPE 2

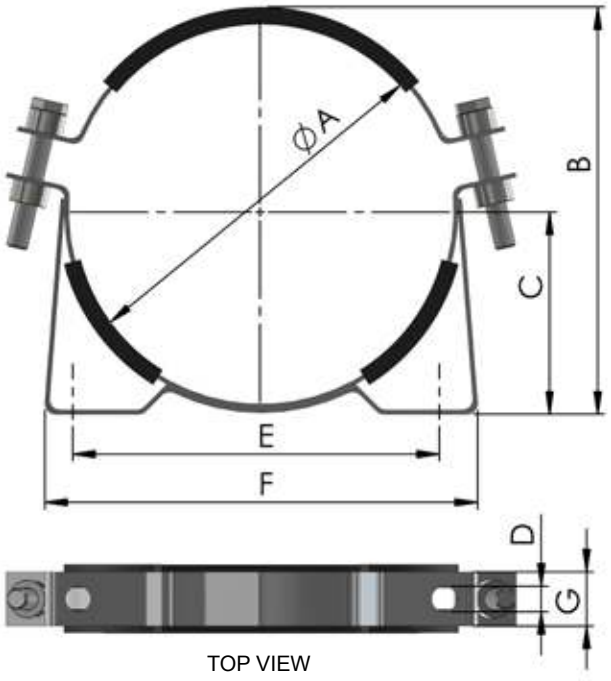

TOP VIEW

MOUNTING COLLARS FOR BLADDER ACCUMULATORS*

ITEM	TYPE	PART NUMBER ZINC PLATED	PART NUMBER STAINLESS	DIMENSIONS (IN.)						
				A	B	C	D	E	F	G
1 QT 3000 & 5000 PSI Collar	1	AI-1QT-511	AI-1QT-511-SS	4.7	6.7	3.0	0.4	3.9	5.4	1.2
1 GAL 3000 PSI Collar	1	AI-1-511	-	6.8	8.7	3.9	0.4	6.1	7.5	1.2
1 GAL 3000 PSI Collar	1	-	AI-1-511-SS	6.8	9.0	3.9	0.4	6.0	7.5	1.3
1 GAL 6000 PSI Collar	1	AI-1-6-511	-	7.2	9.3	4.0	0.4	6.3	7.9	1.3
1 GAL 6000 PSI Collar	1	-	AI-1-6-511-SS	7.2	9.2	4.2	0.4	6.1	7.9	1.2
2.5-15 GAL 3000 PSI Collar	2	AI-S-511	AI-S-511-SS	9.0	9.7	5.0	0.6	8.5	10.0	1.2
2.5-15 GAL 6000 PSI Collar	2	AI-S6-511	AI-S6-511-SS	9.5	10.3	5.3	0.6	9.0	11.2	1.6
2.5-15 GAL 10000 PSI Collar	2	-	AI-S10-511-SS	11.6	12.5	6.4	0.7	10.7	14.8	1.5

In addition to the standard options shown above, mounting collars are available in increments of 1/4" from 2" OD to 20" OD (AI-CLR-200 through AI-CLR-2000). Please visit our website for more information.

Mounting collars are sold in kit form, including the appropriate adjustment bolts and rubber cushions. Mounting bolts are not included (for hole marked D). Standard collars are carbon steel plated with zinc. Stainless collars are 300 series stainless. Mounting bases are recommended and are sold separately.

These collars are mounting fasteners only and are not intended to support the entire weight of an accumulator. Contact us for specifications.

*Dimensions are nominal and may vary within manufacturing tolerances. For exact dimensions of our stock, please contact Acc Inc in advance of order.