BASES

BLADDER ACCUMULATORS - MOUNTING

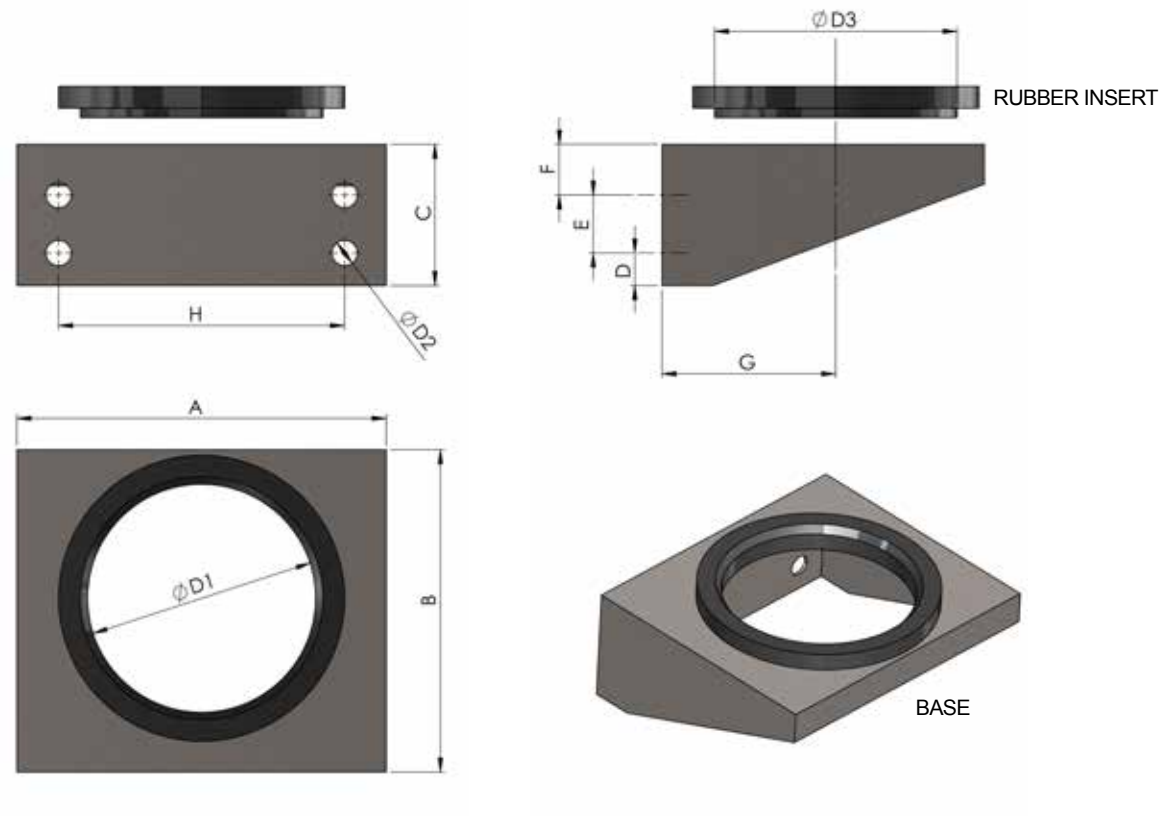

MOUNTING BASES FOR BLADDER ACCUMULATORS

ITEM	KIT PART NUMBER	DIMENSIONS (IN.)										
		A	B	C	D	D1	D2	D3	E	F	G	H
1 QT 3000 & 5000 PSI Base	AI-1QT-512	7.9	6.9	3.5	0.7	4.3	0.4	4.7	1.6	1.2	3.7	5.5
1 QT 3000 & 6000 PSI SS Base	AI-1QT-512-SS	7.9	6.9	3.5	0.7	4.3	0.4	4.7	1.6	1.2	3.7	5.5
1 GAL 3000 & 6000 PSI Base	AI-1-512	10.2	8.9	3.9	1.0	4.3	0.7	4.7	1.6	1.4	3.6	7.9
1 GAL 3000 & 6000 PSI SS Base	AI-1-512-SS	10.2	8.9	3.9	1.0	4.3	0.7	4.7	1.6	1.4	3.6	7.9
1 QT & 1 GAL Rubber Insert Replacement	AI-1QT-513	-	-	-	-	4.3	-	4.7	-	-	-	-
2.5-15 GAL 3000 PSI Base	AI-S-512	10.2	8.9	3.9	1.0	6.3	0.7	6.7	1.6	1.4	4.8	7.9
2.5-15 GAL 3000 PSI SS Base	AI-S-512-SS	10.2	8.9	3.9	1.0	6.3	0.7	6.7	1.6	1.4	4.8	7.9
2.5-15 GAL 6000 PSI Base	AI-S6-512	10.2	9.4	3.9	1.0	6.3	0.7	6.7	1.6	1.4	5.3	7.9
2.5-15 GAL 6000 PSI SS Base	AI-S6-512-SS	10.2	9.4	3.9	1.0	6.3	0.7	6.7	1.6	1.4	5.3	7.9
2.5-15 GAL 10000 PSI SS Base	AI-S10-512-SS	12	12.5	3.9	0.9	6.3	0.7	6.7	1.6	1.4	6.4	7.9
2.5-15 GAL Rubber Insert Replacement	AI-S-513	-	-	-	-	6.3	-	6.7	-	-	-	-

Bases can be used in conjunction with our rubber-lined mounting collars to achieve proper vertical alignment.

All mounting bases are sold in kit form and include the rubber insert. Mounting bolts are not included.

Standard mounting bases are zinc plated carbon steel. Stainless steel units are 300 series stainless. Dimensions are nominal and may vary within manufacturing tolerances. Mounting collars sold separately.