HYVAIR

INDUSTRIAL FLUID POWER COMPONENTS AND SYSTEMS

HEDG SERIES

Proportional Relief Valves

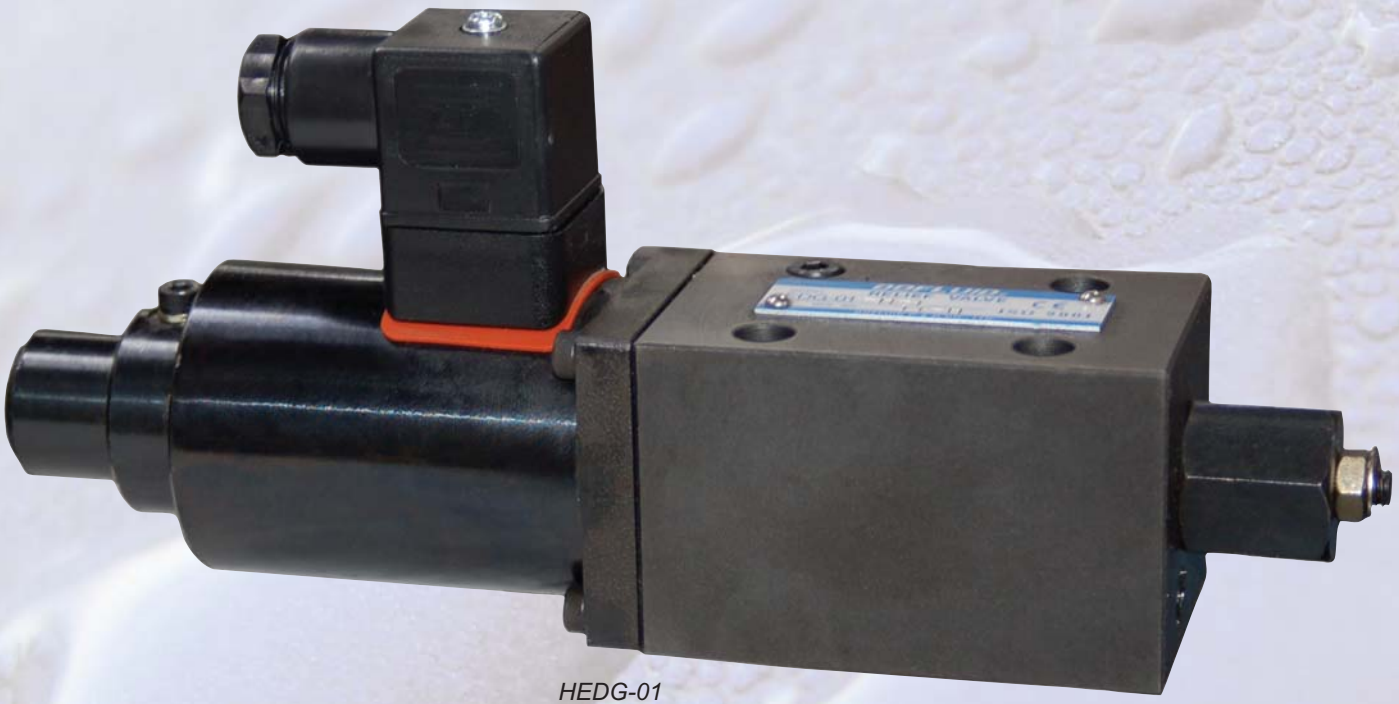

HEDG-01

31341 Friendship Drive, Magnolia, TX 77355 • Tel.: 281-259-7768 Fax: 281-259-7249 • www.hyvair.com

HEDG Series

Proportional Relief Valves

Features

• **Proportional Pressure Control:** Used in very low flow applications such as pressure control of pilot lines or remote pressure compensator control. The valve consists of a small DC solenoid and a direct acting relief. An amplifier is required to supply the 0 to +10VDC signal.

•**Uses Common Subplate:** The standard D03 subplate may be used. Make certain the tank line is plumbed directly back to tank and do not exceed 30 psi in the tank line.

•**Full Proportional Relief Family:** Flows up to 100 gpm are available but not shown here. These higher flow valves are used primarily with fixed displacement pumps.

HEDG-01

Specifications

Max. Operating Pressure, psi (bar)	3600 (250)
Maximum Flow, gpm (l/min)	0.53 (2)
Minimum Flow, gpm (l/min)	0.08 (0.3)
Pressure Adjustment Range, psi (bar)	B= 72-1000 (5-70), C= 145-2300(10-160) D= 175-3600 (12-250)
Rated Current (mA)	B= 800 mA C= 900 mA D= 950 mA
Coil Resistance (ohms)	10
Hysteresis	Less than 3%
Repeatability	1%
Weight lbs (kg)	4.4 lbs (2)

Full Model Codes (with safety relief)
72-1000 psi: HEDG-01**B**1PNT15
145-2300 psi: HEDG-01**C**1PNT15
175-3600 psi: HEDG-01**D**1PNT15

Valve may be powered by EDAPD1NWZ amplifier
(24vdc, 2amp power supply required)

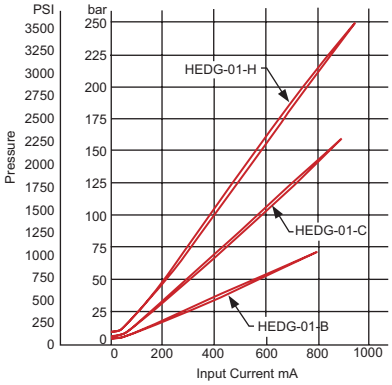

Dimensional Data

Units: mm/ Inches

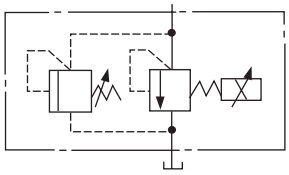

With Safety Relief
(standard)

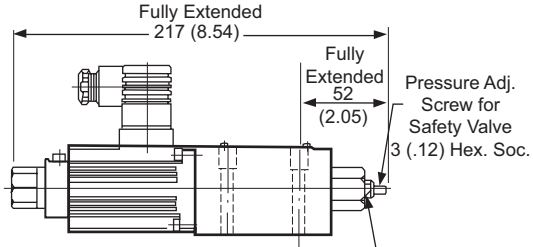

With Safety Relief
(For other dims., refer to the drawing without safety valve)

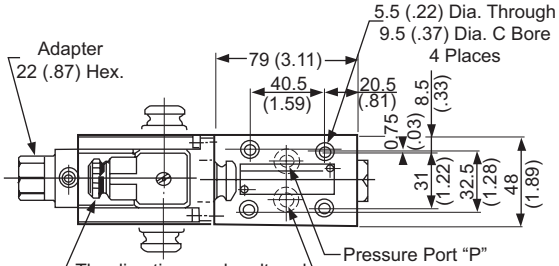

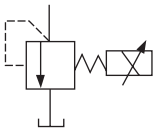

Without Safety Relief
(standard)

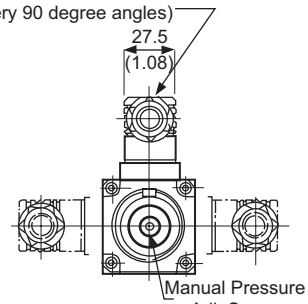

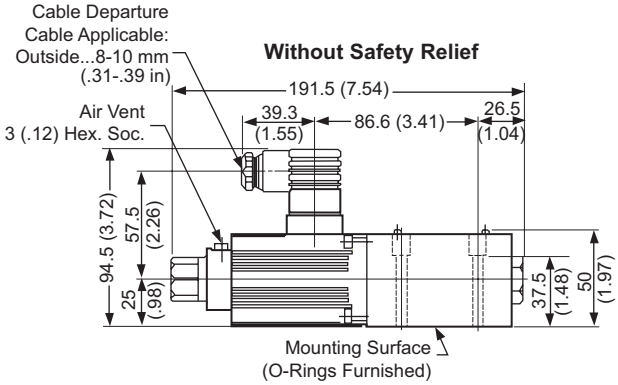

31341 Friendship Drive, Magnolia, TX 77355 • Tel.: 281-259-7768 Fax: 281-259-7249 • www.hyvair.com