Features

D07SD

- **High Pressure/ High Flow:**
  4600 psi (320 bar)/ 80 gpm (300 lpm)
- **Pilot Operation:**
  Main spool controlled by D03 solenoid pilot valve
- **Oil Immersed, Quiet Solenoid Design:**
  Moving core immersed in hydraulic oil provides quiet pilot operation
- **Wiring:**
  Electrical box with indicator lights and terminal strip connection standard. DIN coils available and provided with DIN connector.
- **Maintenance:** Indicator lamps to diagnose connection; Plug-in coils provide easy changing
- **High Reliability:** Valve designed to last 20 million spool shifts under proper use.

Technical Data

Maximum Flow Rate from port P to A, B, T	80 gpm (300 lpm)
Maximum Operating Pressure: **ports P, A, B** **port T** **port T (external drain version)**	 4600 psi (320 bar) 3000 psi (210 bar) 3600 psi (250 bar)
Pressure Drop	see pressure drop curves
Hydraulic Fluid	Petroleum Oils (HM, HL, HLP)
Fluid Temperature Range for NBR seals	-22 to +176°F (-30 to +80°C)
Fluid Temperature Range for FPM seals	-4 to + 176°F (-20 to +80°C)
Maximum Ambient Temperature	up to 122°F (50°C)
Viscosity Range	98 - 1840 SUS (20 - 400) mm^2/s
Maximum Degree of Fluid Contamination	Class 21/ 18/ 15 to ISO 4406 (1999)
Weight: **Single Solenoid** **Double Solenoid**	 19 lbs (8.5 kg) 20 lbs (9.1 kg)

Performance Characteristics

PRESSURE	MINIMUM	MAXIMUM
Pilot Pressure	72.5 psi (5 bar)	3043 psi (210 bar)
Pressure on Line T with internal drainage	——	2029 psi (140 bar)
Pressure on Line T with external drainage	——	3623 psi (250 bar)

MAXIMUM FLOW RATES	PRESSURES	
	3045 psi (210 bar)	**4640 psi (320 bar)**
Spool Type 2C	66 gpm (250 lpm)	53 gpm (200 lpm)
All Other Spools	80 gpm (300 lpm)	66 gpm (250 lpm)

Pressure Drop Curves

Measured at **v** = 166 SUS (35 mm²/s) and **t** = 122°F (50°C)

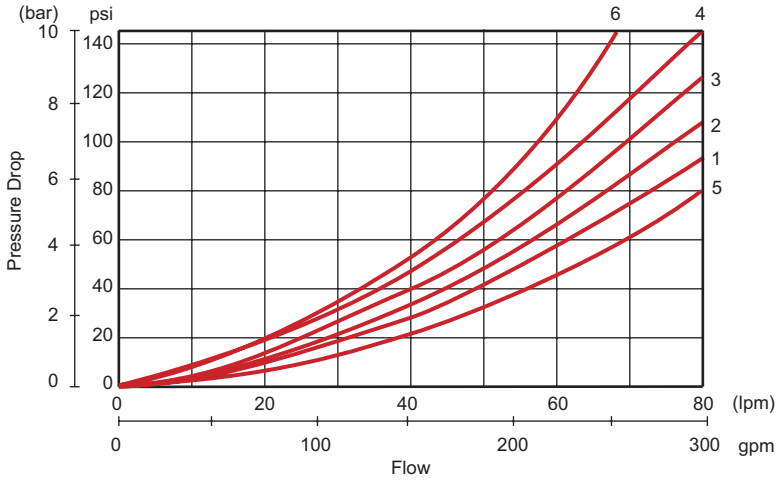

Valve Spool Type	Spool Position	Flow Path				
		P⇨A	P⇨B	A⇨T	B⇨T	P⇨T
1A, 1AY 1AR, 1ARY	De-Energized	1			3	
	Energized		1	2		
2B	Energized	1	1	2	3	
2C	De-Energized					6
	Energized	6	6	3	4	
2F	De-Energized			4•	4o	
	Energized	1	1	1	2	
2H	De-Energized					6*
	Energized	5	5	1	2	
3A, 3AY	Energized	1	1	2	3	

*A-B blocked •B blocked oA blocked

Spool Symbols

Two positions with spring return	
1A	
1AY	
1AR	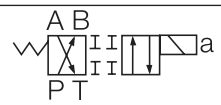
1ARY	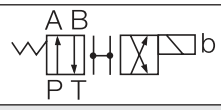
Three positions with spring centered	
2B	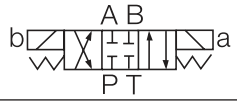
2C	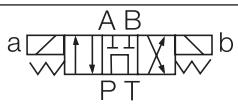
2F	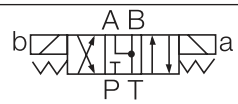
2H	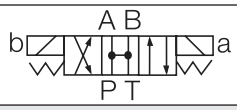
Two positions with mechanical detent on pilot valve	
3A	
3AY	

Dimensional Data

Units: mm (inches)

Remove Access Plug to Add or Remove Lower External Drain Plug

Plug = External Drain
No Plug = Internal Drain

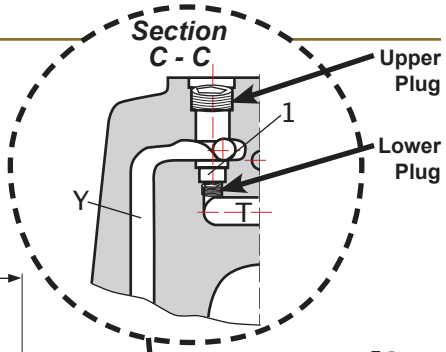

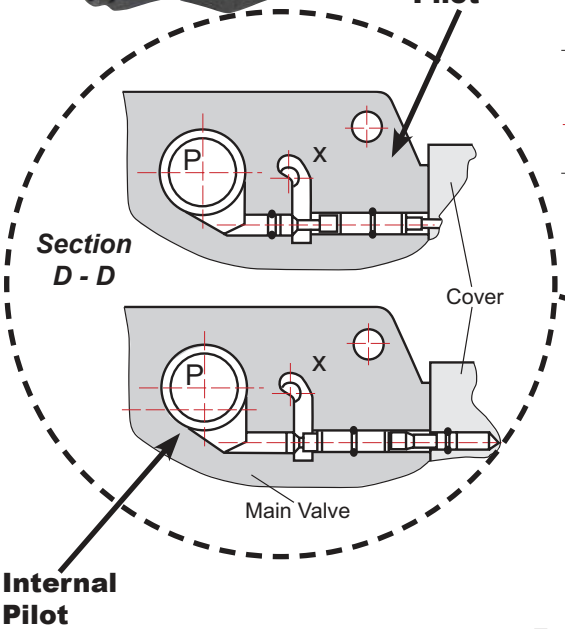

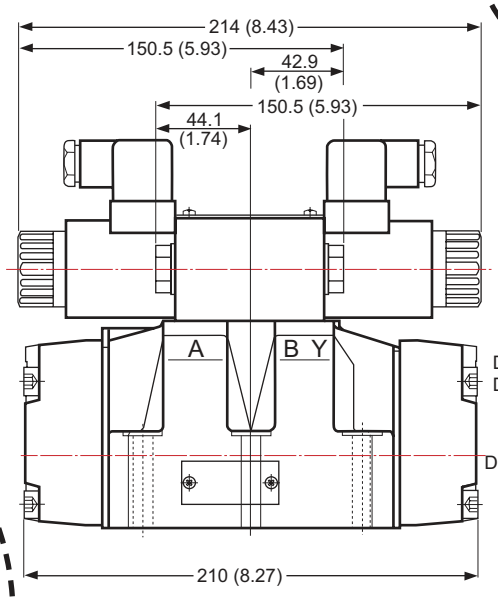

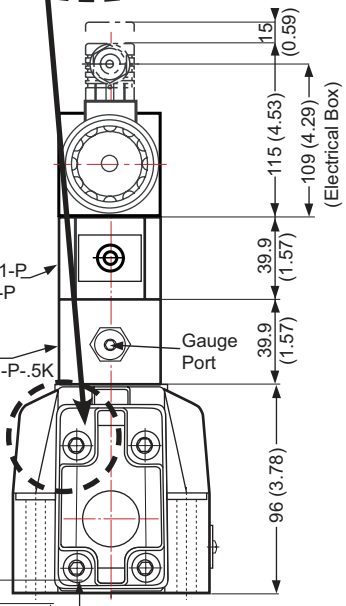

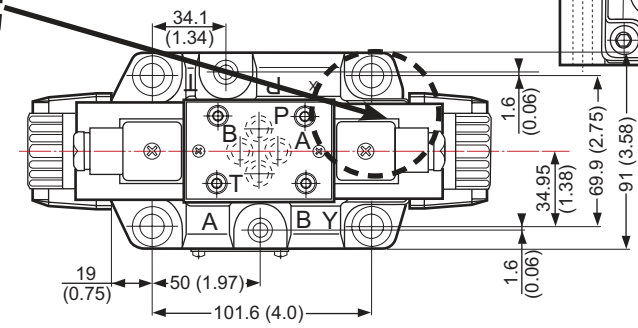

Installation Dimensions

Single Valve Fastening:

4 Bolts (3/8-16 UNC x 2-1/4")
29.5 ft-lbs / GR 8 SHCS

2 Bolts (1/4-20 UNC x 2-1/4")
5.9 ft-lbs / GR 8 SHCS

O Rings: (metric)

4 O-rings type 22.22 x 2.62
2 O-rings type 10.82 x 1.78

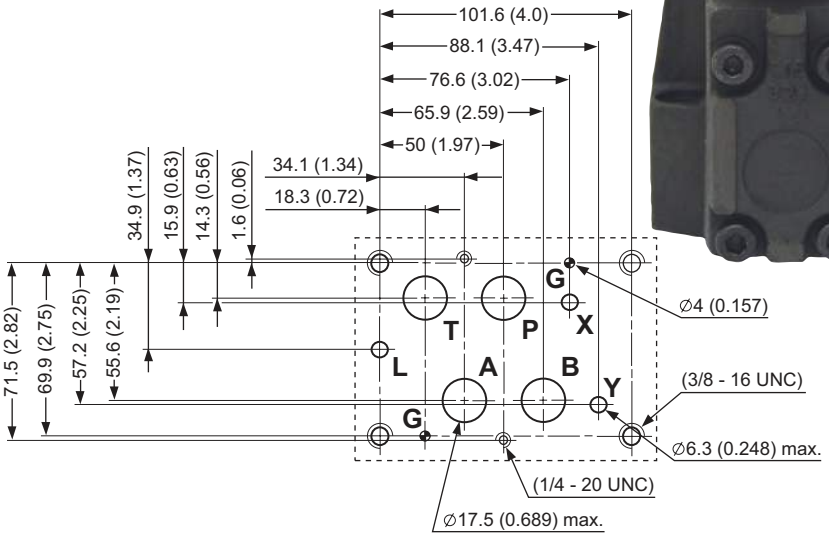

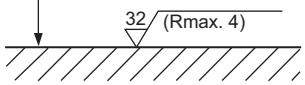

Required Surface Finsih of Interface

Cross Section

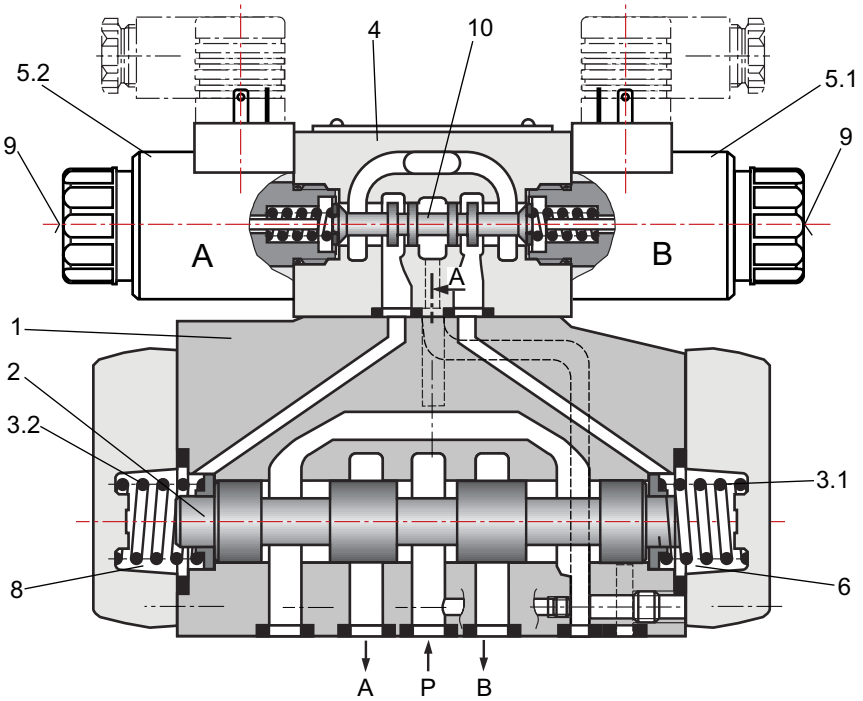

1-Main Valve with Housing	**3.2**-Return Spring	**5.2**-Solenoid	**9**-Manual Override
2-Main Control Spool	**4**-Pilot Valve	**6**-Spring Chamber	**9**-Manual Override
3.1-Return Spring	**5.1**-Solenoid	**8**-Spring Chamber	**10**-Pilot Spool

Ordering Information

D07 S - 2 B - 115 A - Options - 35

Size
D07

Code	Actuator
S	Solenoid
SD	Solenoid w/ Din Coil
SC	Solenoid w/ *Pilot Choke
SDC	Solenoid w/ Din Coil & *Pilot Choke

Code	Configuration
1	Single Solenoid • 2 position, spring offset
2	Double Solenoid • 3 position, spring centered
3	Double Solenoid • 2 position, no center, detented

Code	Spool Function
A	P to A, B to T
B	All Ports Blocked
C	P to T, A & B Blocked
F	P Blocked, A & B to T
H	All Ports Open

Voltage
12
24
115
230

Current/ Connector	
A	AC
D	DC

*Pilot choke valve, (D03FC1-AB-MO- meter out flow control), provides softer shifting.
Also consider additionally using D03PR1-P-.5K pressure reducing valve if system pressure is above 1,000 psi. (See dimensional data)

Options:

"EP" suffix for External Pilot (x-port connection) **"ED"** suffix for External Drain (y-port connection)

At least one of these options must be used on C & H spools unless Internal Pre Load Check (standard) is used.